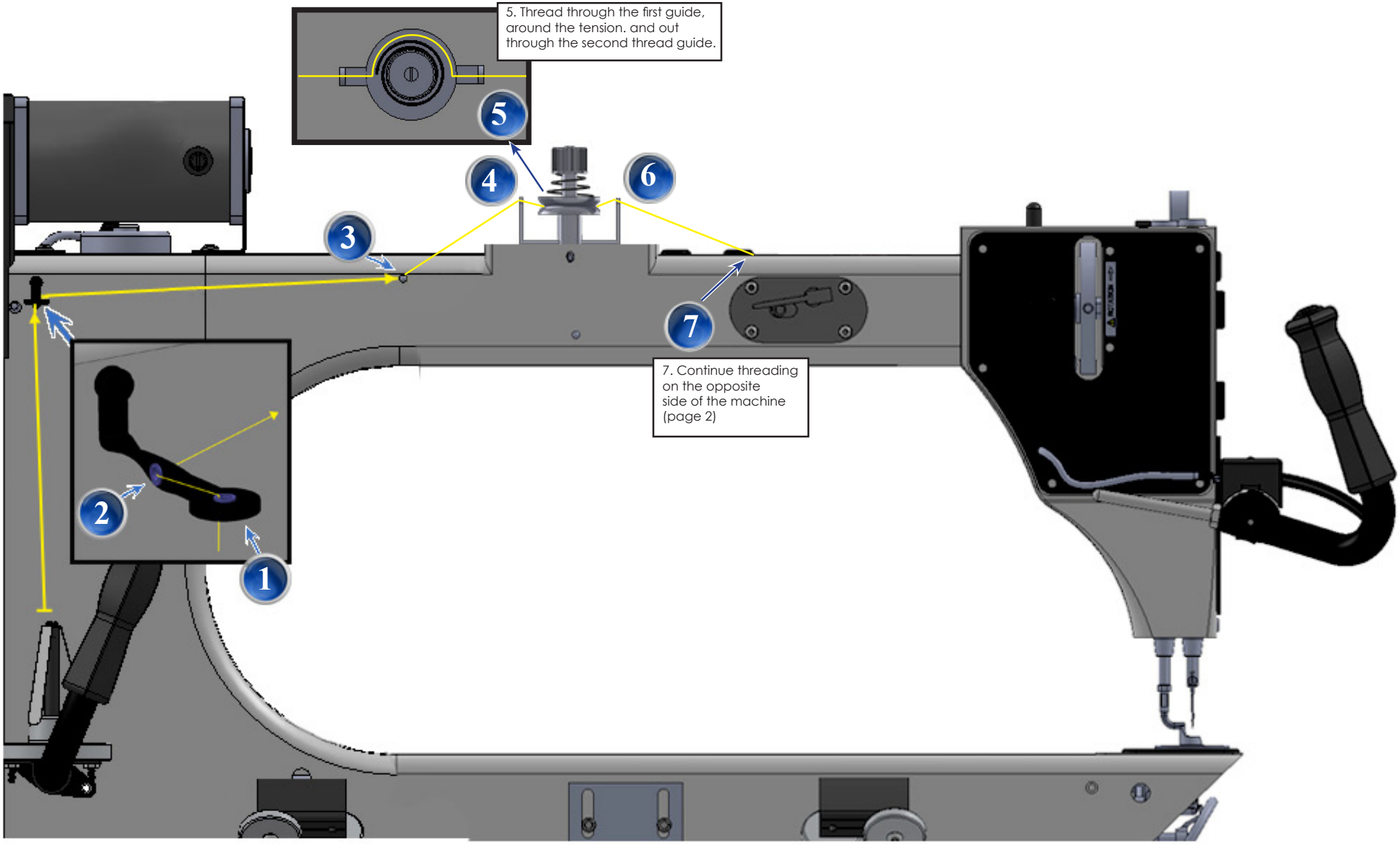
5. Thread through the first guide, around the tension. and out through the second thread guide.
5
4
6
3
7
7. Continue threading on the opposite side of the machine (page 2)
2
1

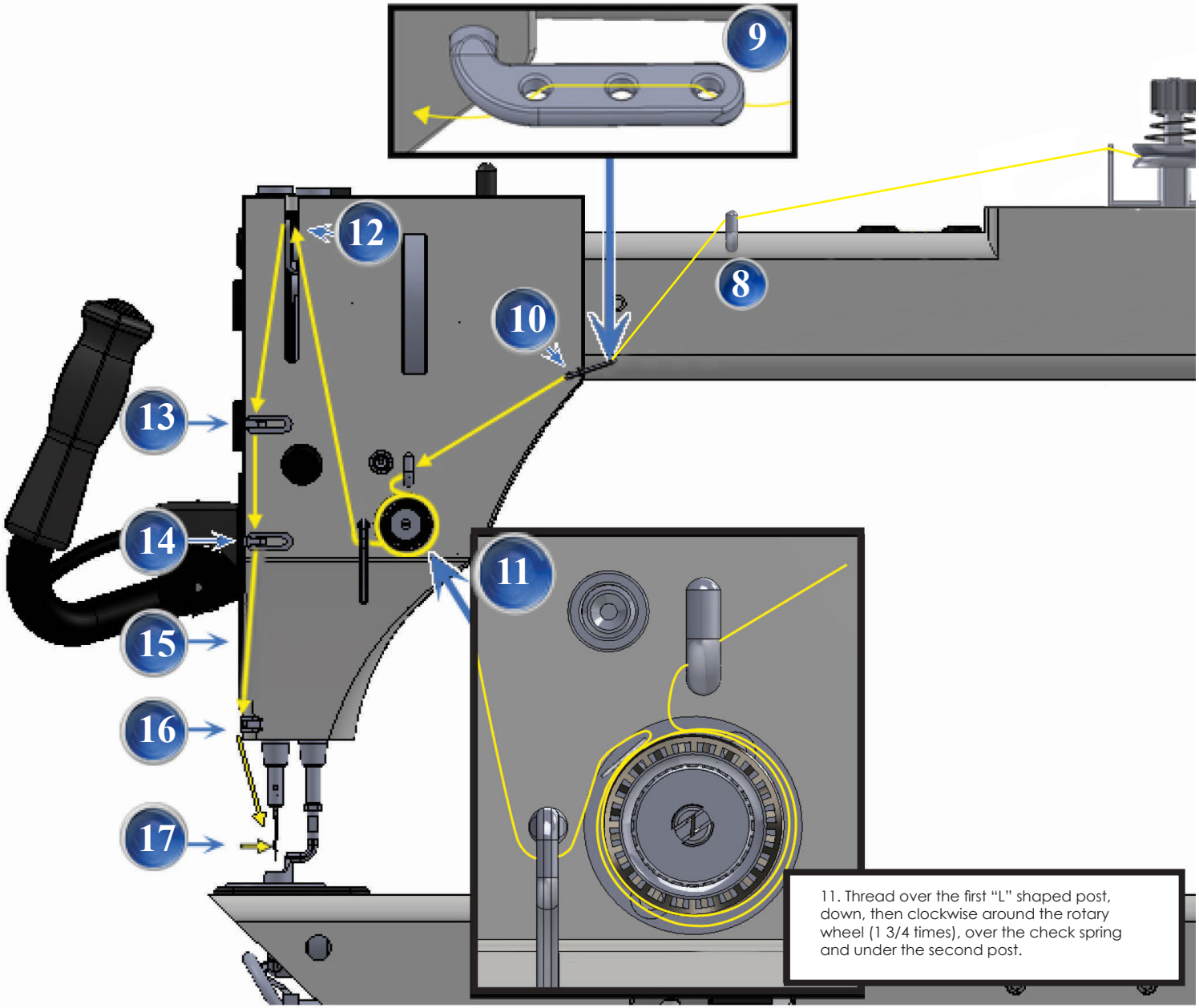

11. Thread over the first "L" shaped post, down, then clockwise around the rotary wheel (1 3/4 times), over the check spring and under the second post.